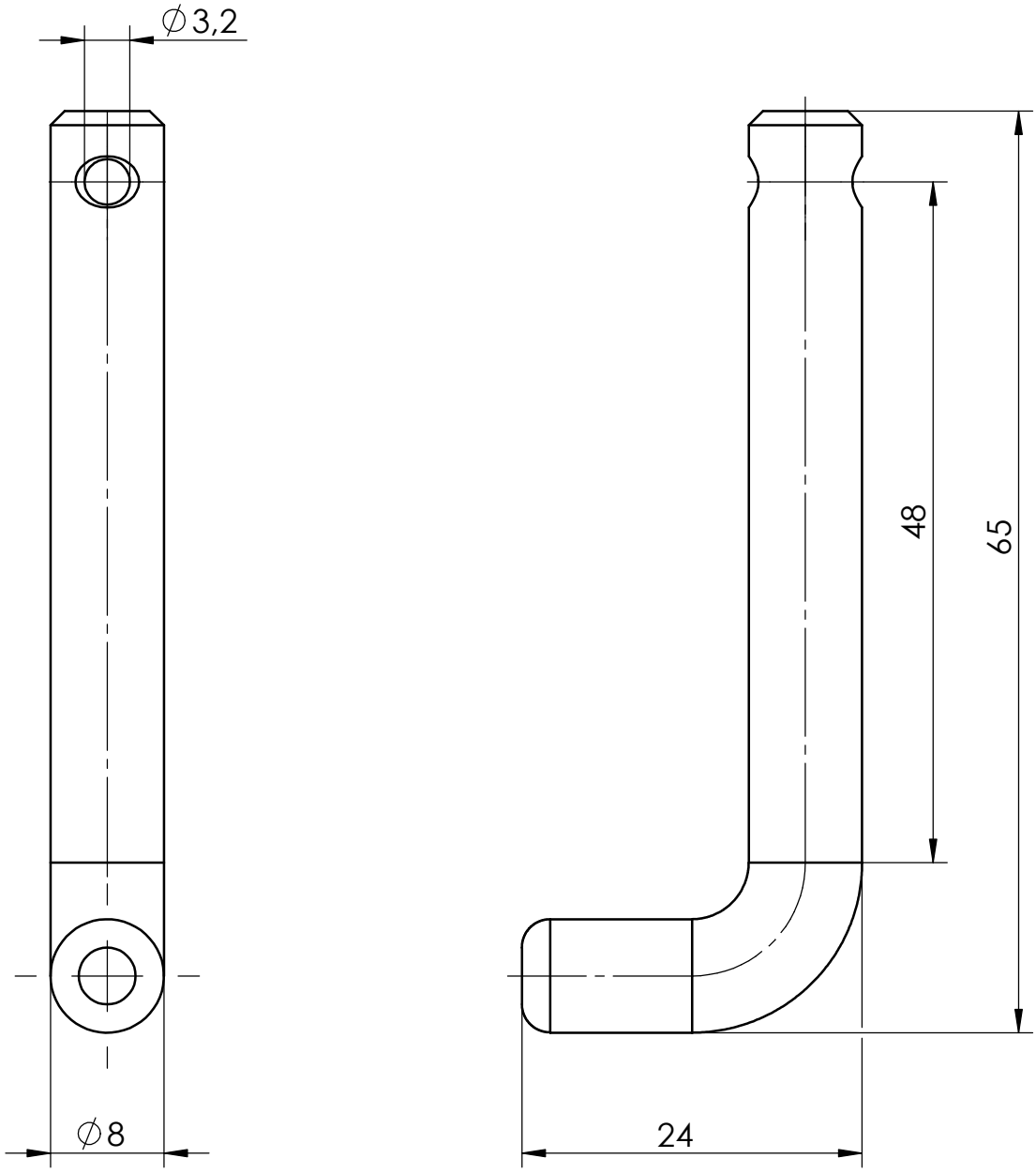

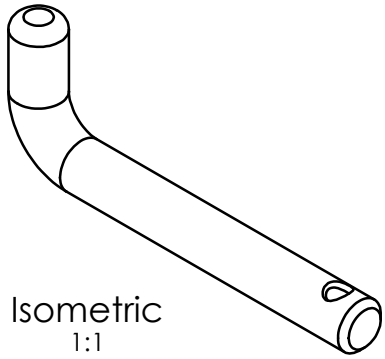

Isometric
1:1

K2 Systems GmbH
Industriestr. 18
71272 Renningen
Germany
+49 7159 42059-0

Designation:

Data sheet Pin

	Name	Date	Material:	Item no.:		A4
Designed	A. Gerstenberger	01.02.2023	1.4301 (X5CrNi18-10) TS520	2004241		
Approved	A. Soumpalas	01.02.2023	Surface: mill finish	Drawing no.: 07-470-00		All dimensions in mm
Last change			Weight: ca. 30.0 g/pc	Scale: 2:1		Sheet 1 of 1

This drawing is the sole property of K2 Systems GmbH. It is protected by copyright and may only be copied, reproduced or distributed to a third party with explicit permission!